Mobile Ship HDR LOS Channel Estimation Experiment

21-28 Jan 98

USS Princeton (CG59) to SSC-SD bldg. 379

Date Collection: **Dale Bryan, Tom Staley, Richard North**

Data Analysis: **Mike Reuter, Jeff Allen**

Mobile Ship HDR LOS Channel Estimation Experiment

- **Transmitter**
  - **mobile ship**
  - **1 Mbps, BPSK, PN=511, 40 Watts linear, UHF**
  - **GPS position reported to receive site once/minute**
- **Receiver**
  - **SPAWAR SSC-SD, bldg. 379**
  - **Digital data sets consist of 5.3 seconds of contiguous IF data, bandpass sampled at 12 MHz**
  - **spectrum analyzer and ship's position video taped**
- **Results**
  - **dynamic multipath in San Diego Bay**
  - **strong signal levels to 40 nmi and clean channel with only minor (2-4 dB) slow flat fading while in the Pacific Ocean off Point Loma**
  - **5-10 dB loss (and fades) due to mast obstruction**

Mobile Ship HDR LOS Channel Estimation Experiment

AS-4163
UHF LOS
Antenna

File Photos

Mobile Ship HDR LOS Channel Estimation Experiment

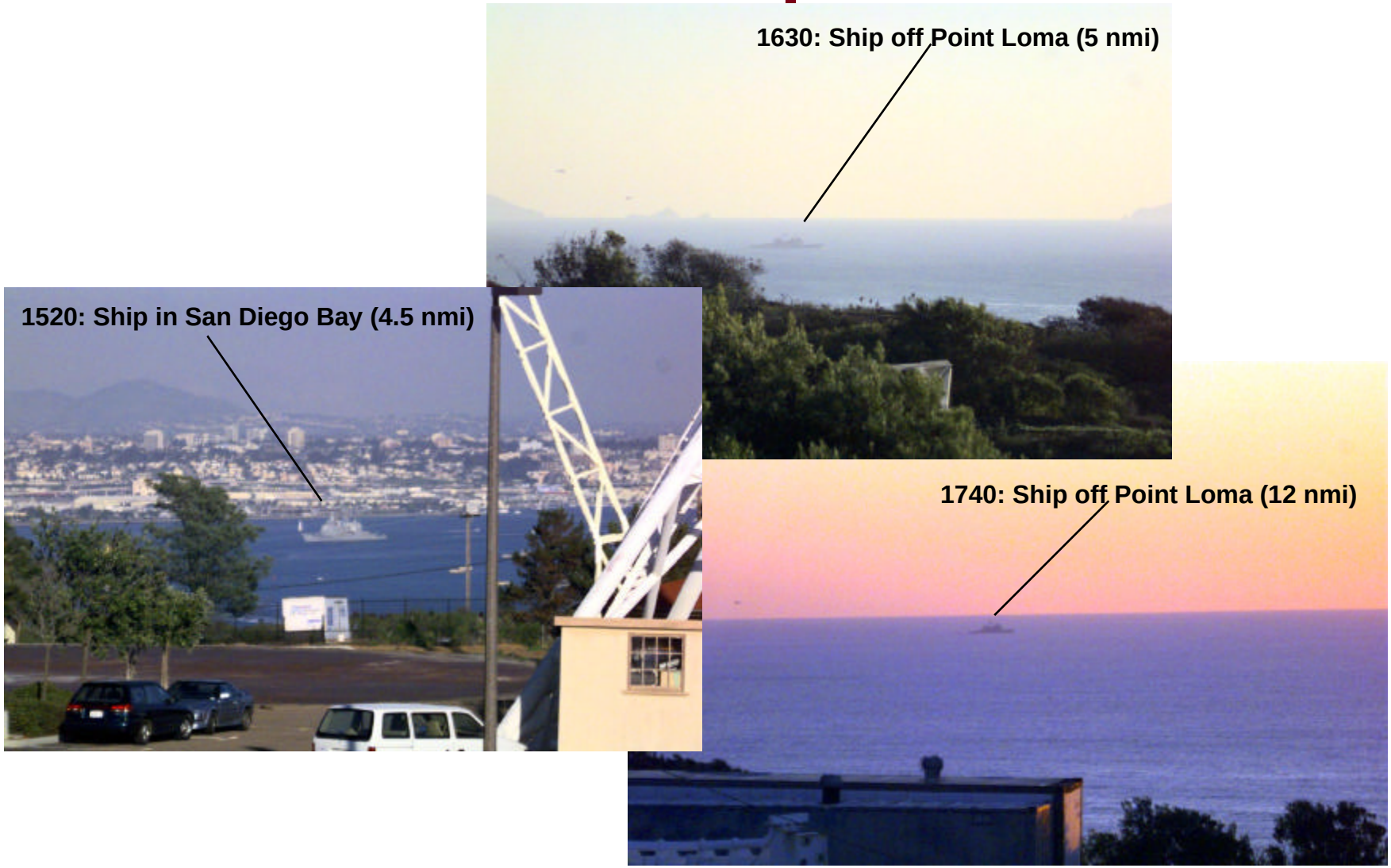

Ship Transmit Equipment

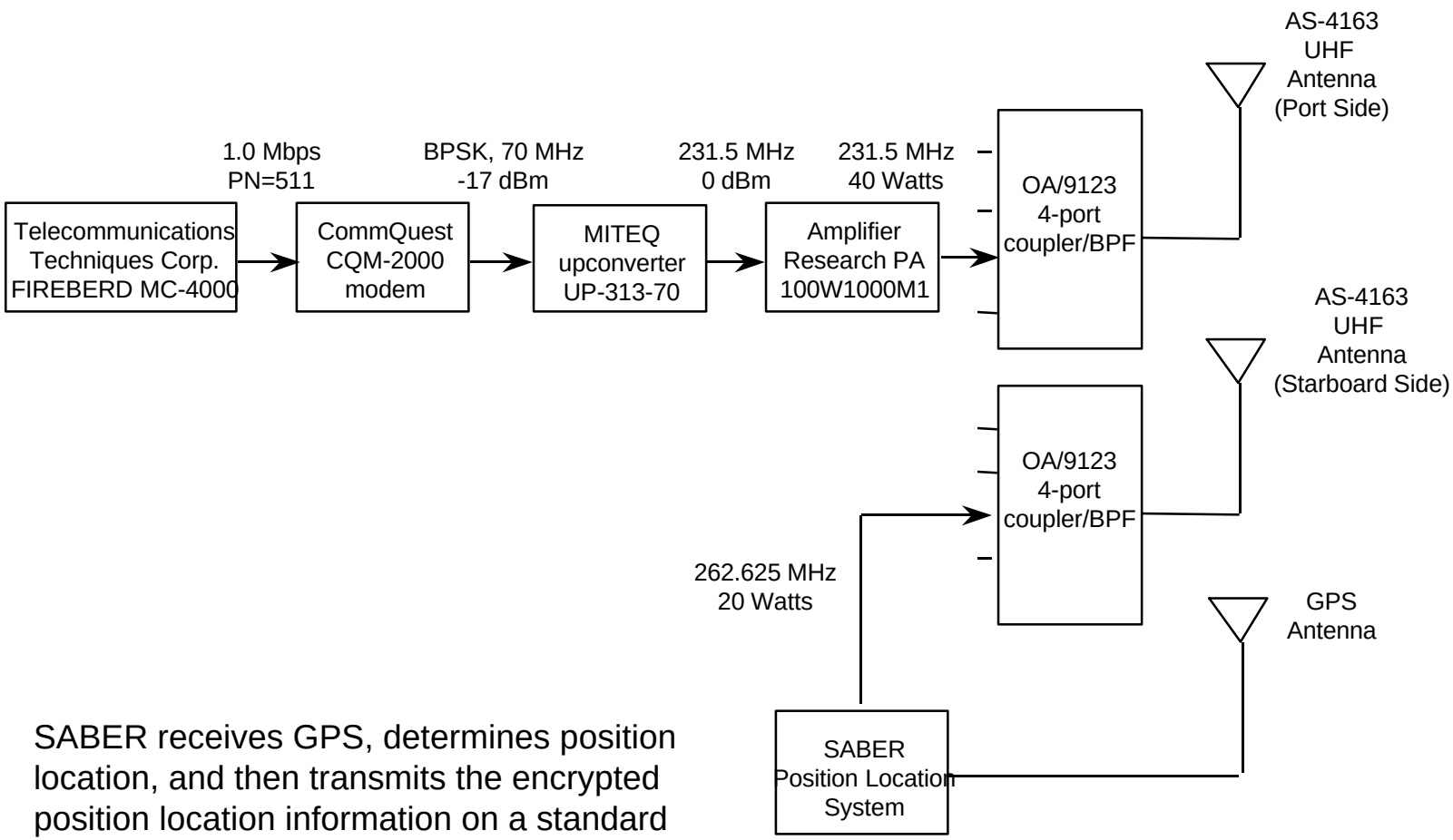

SABER receives GPS, determines position location, and then transmits the encrypted position location information on a standard UHF 25 kHz channel

Bldg. 379 Receive Equipment

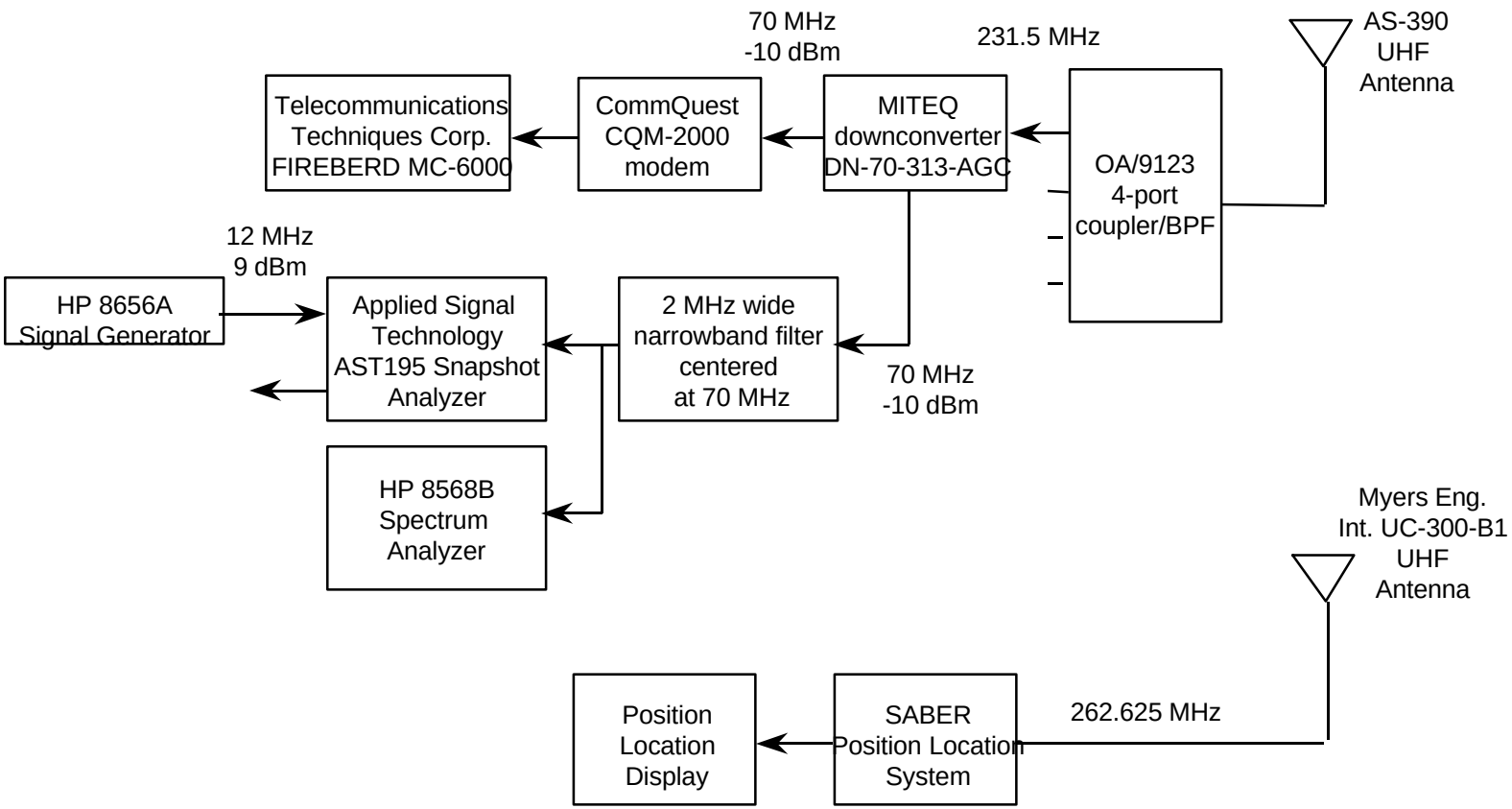

Mobile Ship HDR LOS Channel Estimation Experiment

21 Jan 98 1425-2050

- 1425: ship disembarks from Pier 8, NAVSTASD (range 6.5 nmi)
- 1459: ship under Coronado Bridge in bay (range 4.7 nmi, 5 KT)
- 1551: ship at Ballast Point (range 1.1 nmi, 15 KT, 171*)
- 1615: ship change course to west (range 3.84 nmi, 15 KT, 260*)
- 1645: ship heading west (range 5.0 nmi, 4 KT, 311*)
- 1700: ship heading west (range 6.7 nmi, 11KT, 270*)
- 1800: ship heading west (range 17.0 nmi, 12 KT, 265*)
- 1900: ship heading west (range 27.7 nmi, 13 KT, 262*)
  - 8-PSK TCM test for 30 minutes … excellent BER results
- 1950: ship heading southwest (range 39.3 nmi, 9 KT, 251*)
  - max LOS range for 1 Mbps about 40 nmi
- 2050: ship heading southwest (range 47.0 nmi, 12 KT, 206*)

Mobile Ship HDR LOS Channel Estimation Experiment

21 Jan 98 1425-1700

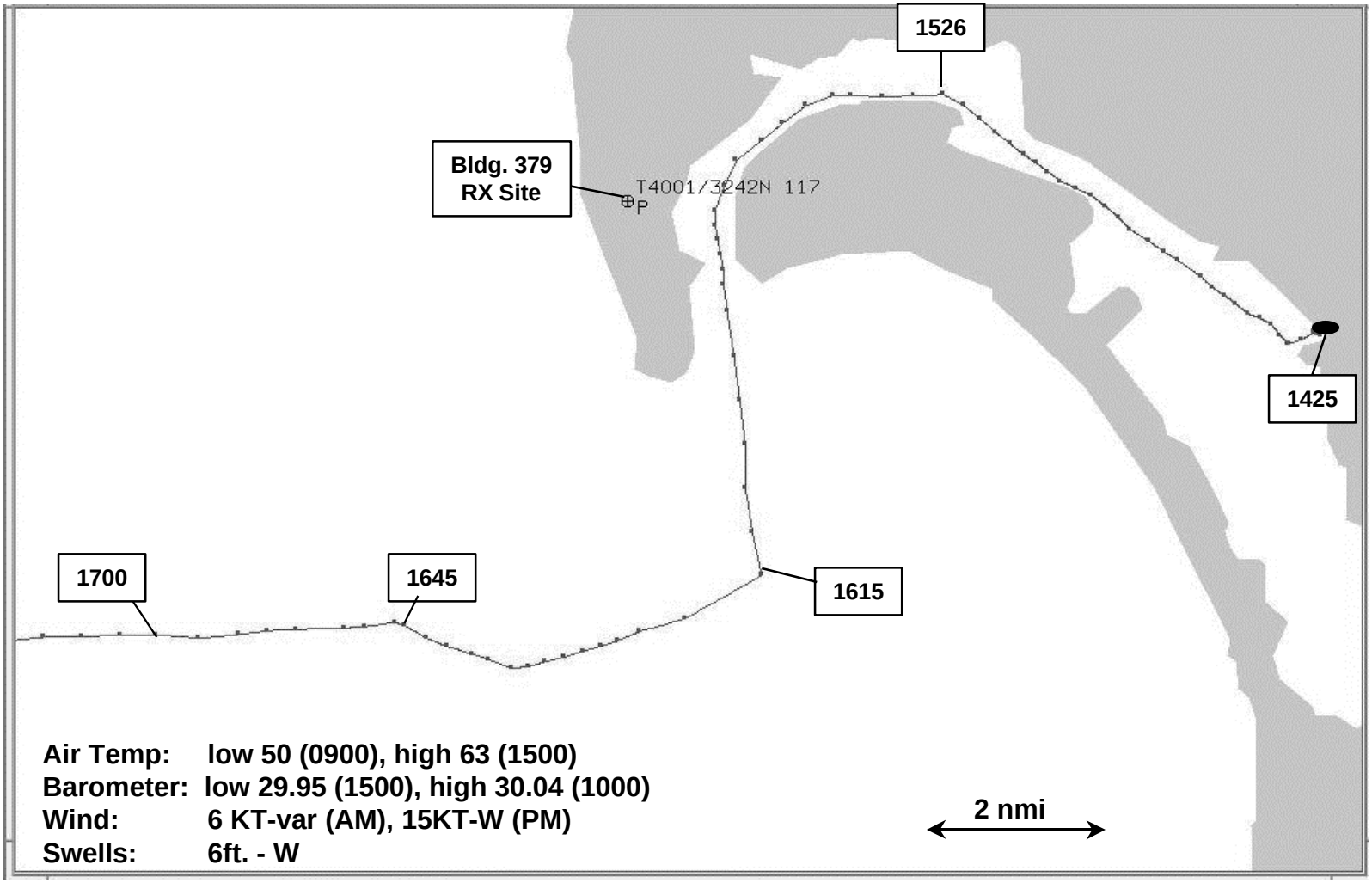

Mobile Ship HDR LOS Channel Estimation Experiment

21 Jan 98 1425 - 22 Jan 98 0930

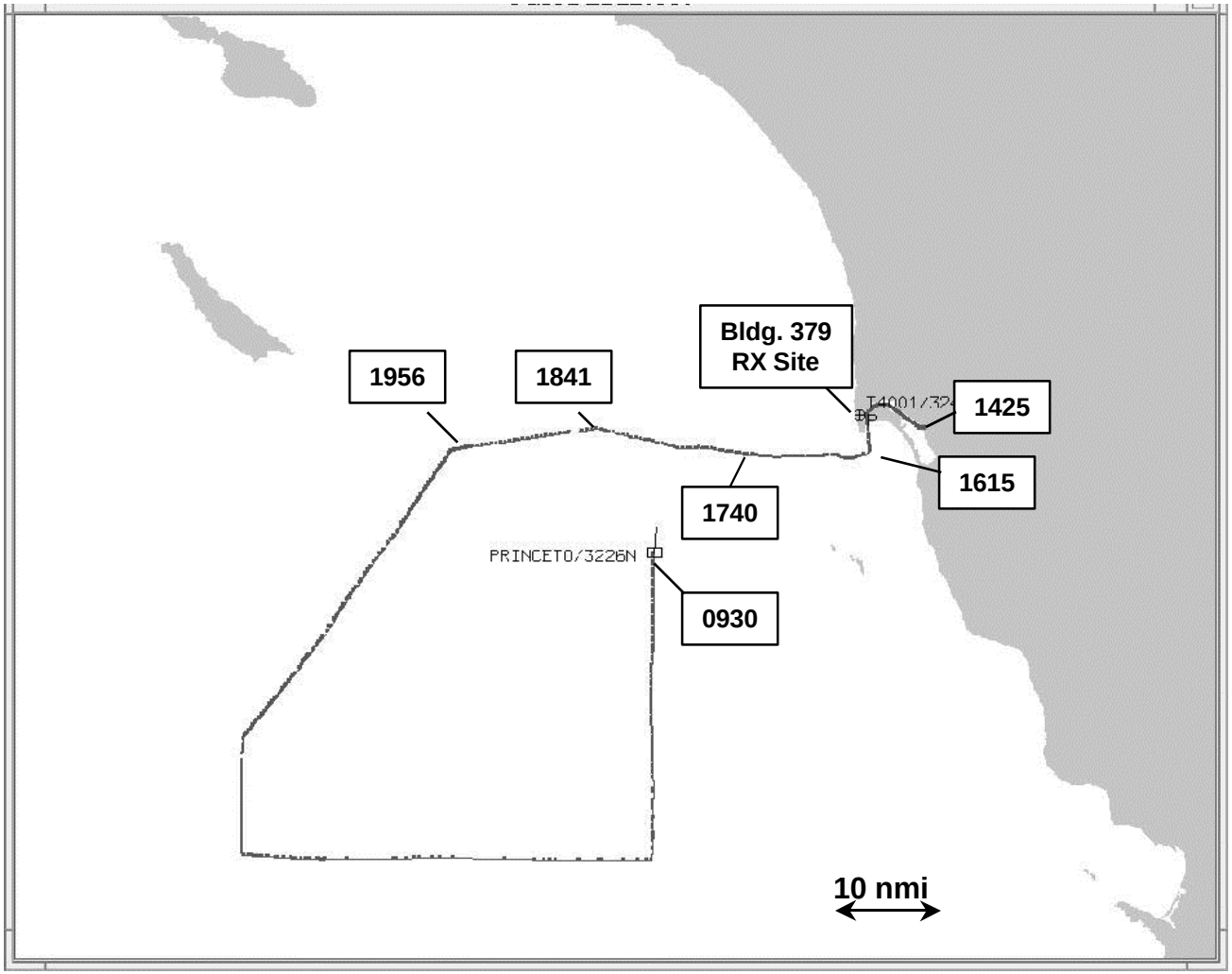

Mobile Ship HDR LOS Channel Estimation Experiment

22 Jan 98 1425-2210

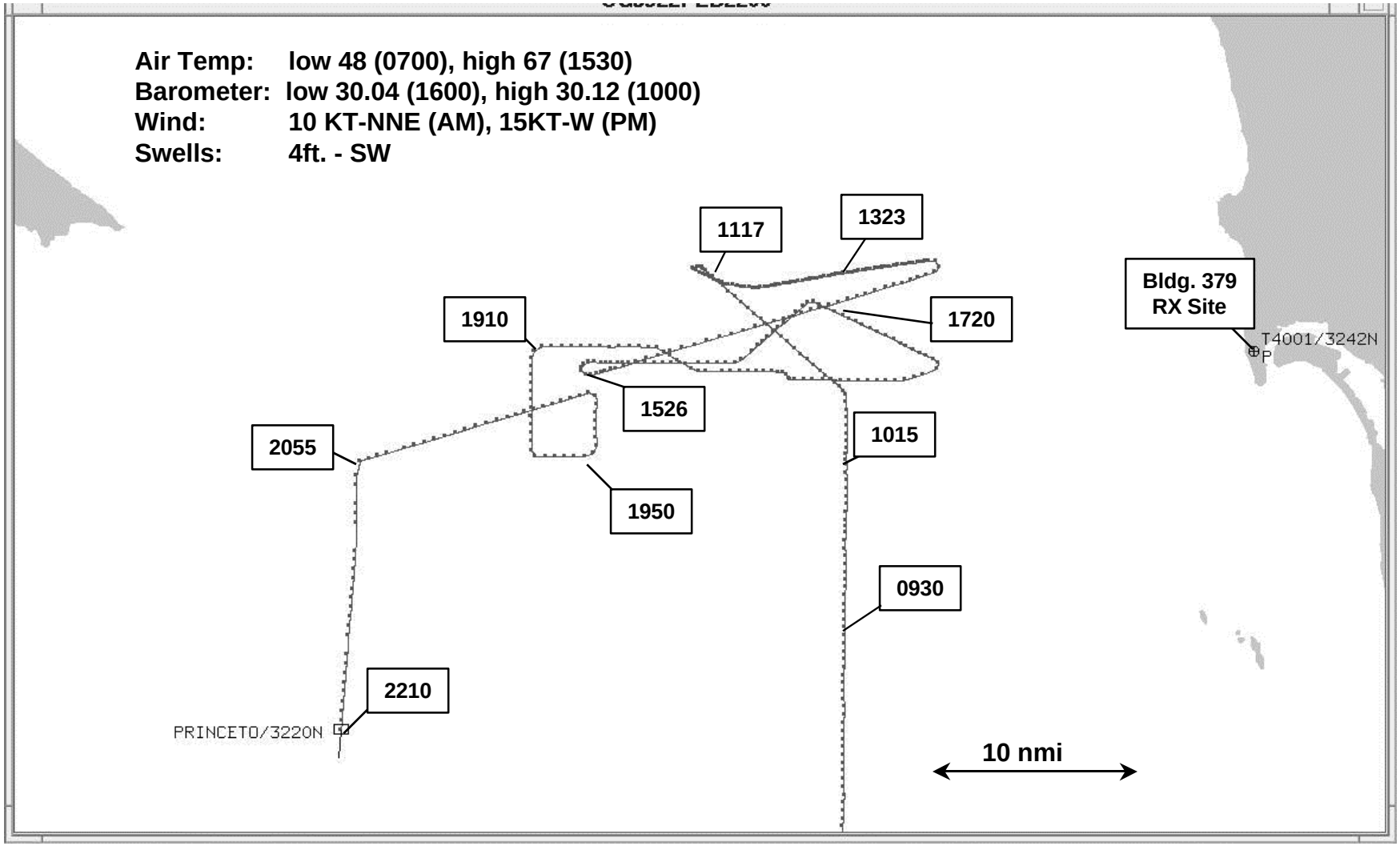

Mobile Ship HDR LOS Channel Estimation Experiment

23 Jan 98 0920-1435

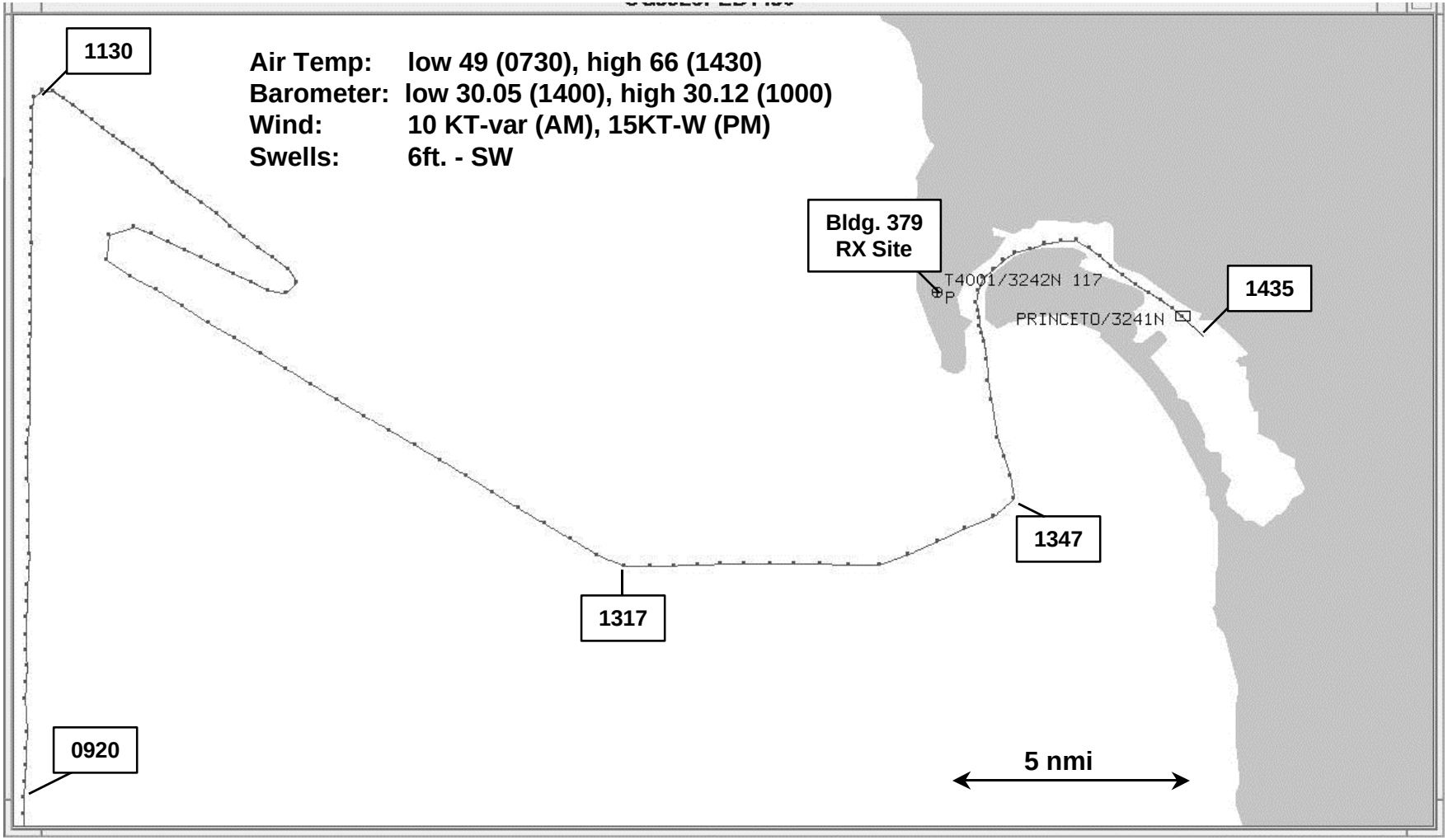

Mobile Ship HDR LOS Channel Estimation Experiment

27 Jan 98 0835-1650

- 0835: ship pulling away from Pier #2 (range 5.7 nmi, 5.7 KT, 298*)
- 0848: ship at Coronado Bridge (range 4.8 nmi, 5.5 KT, 309*)
- 0932: ship passing Shelter Island (range 0.9 nmi, 6.1 KT, 198*)
- 0942: ship at Ballast Point (range 1.24 nmi, 7 KT, 198*)
- 1004: ship turning due West (range 5.2 nmi, 13.8 KT, 254*)
- 1050: ship course change (range 8.5 nmi, 6.0 KT, 284*)
- 1250: ship course change (range 25.5 nmi, 10.0 KT, 14*)
- 1530: max range for 1 Mbps (range 36.1 nmi, 7.0 KT, 225*)

Mobile Ship HDR LOS Channel Estimation Experiment

27 Jan 98 0835-1650

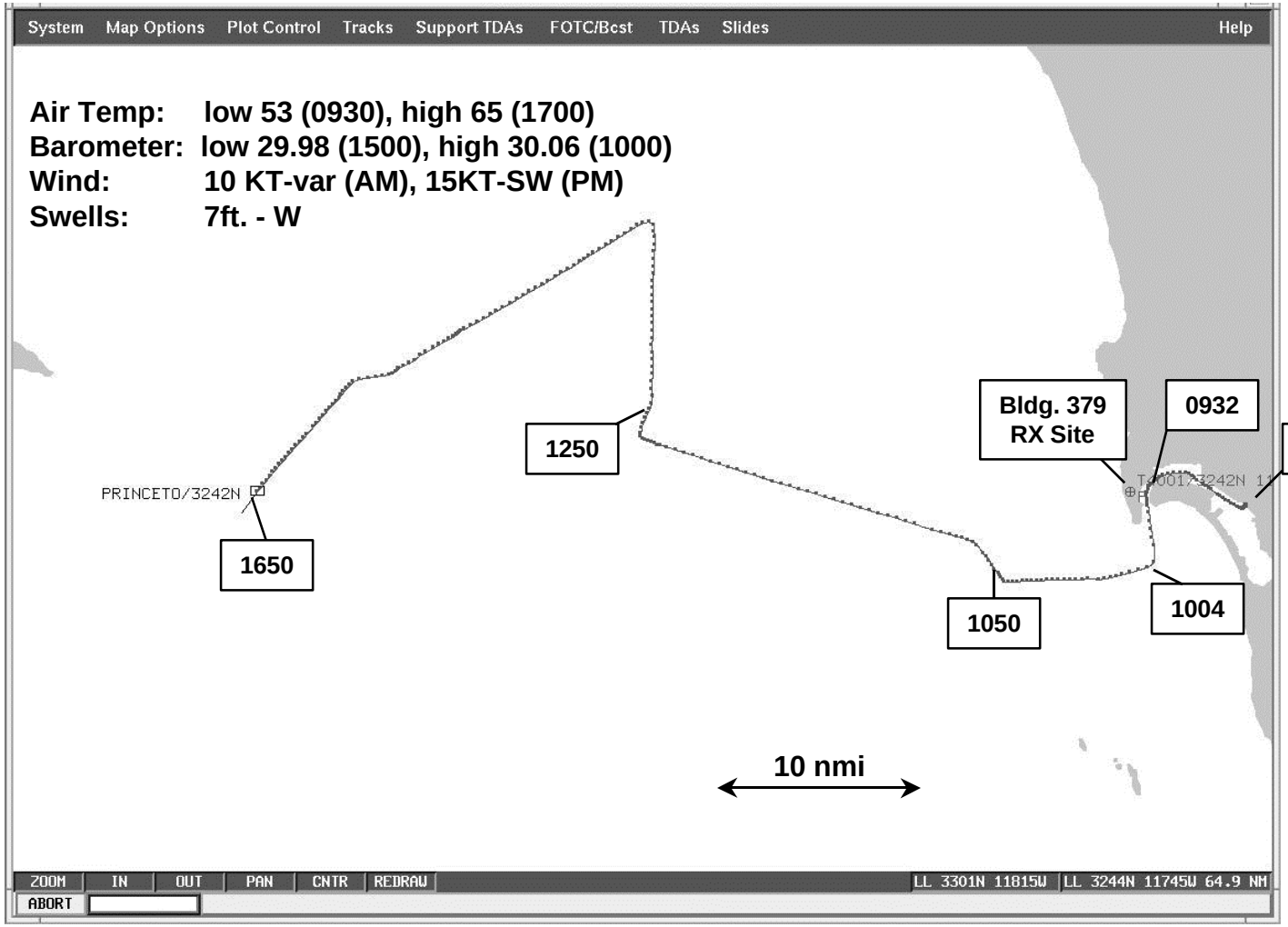

Mobile Ship HDR LOS Channel Estimation Experiment

28 Jan 98 0736-1640

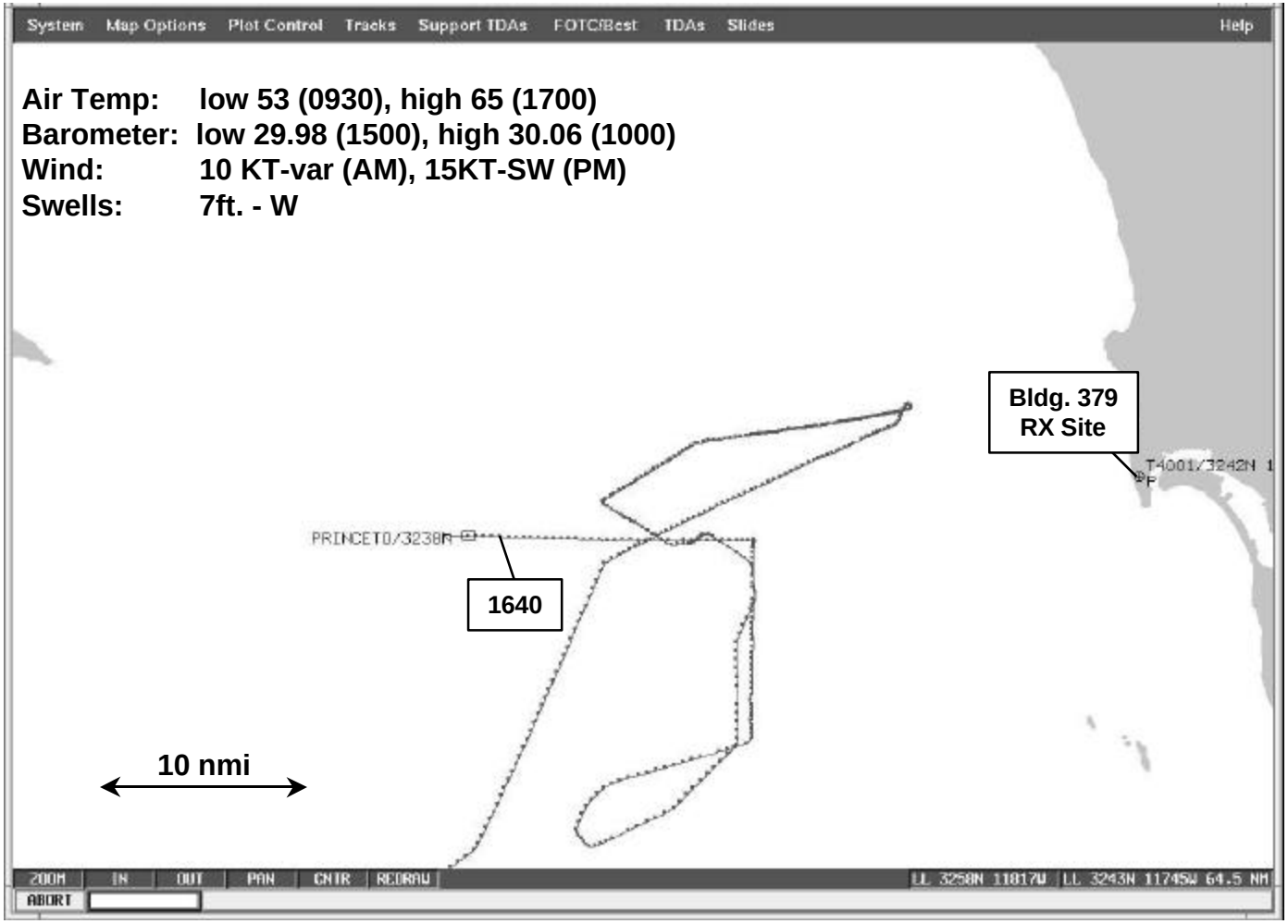

HDR LOS Channel Estimation

21 Jan 1459: ship at Coronado Bridge in San Diego Bay

Spectrum Analyzer Data

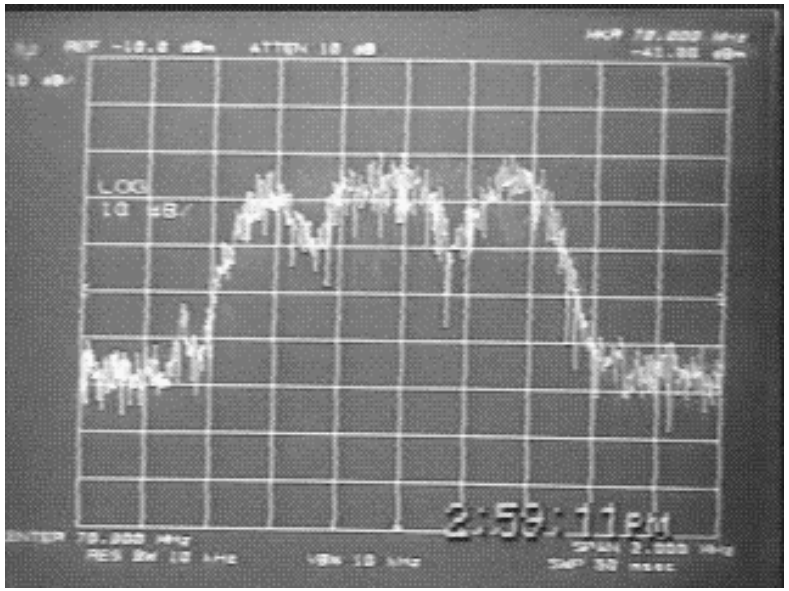

Span: 2 MHz, RBW: 10 kHz,
VBW: 10 KHz, SWP: 50 msec

Channel Estimate as a function of time

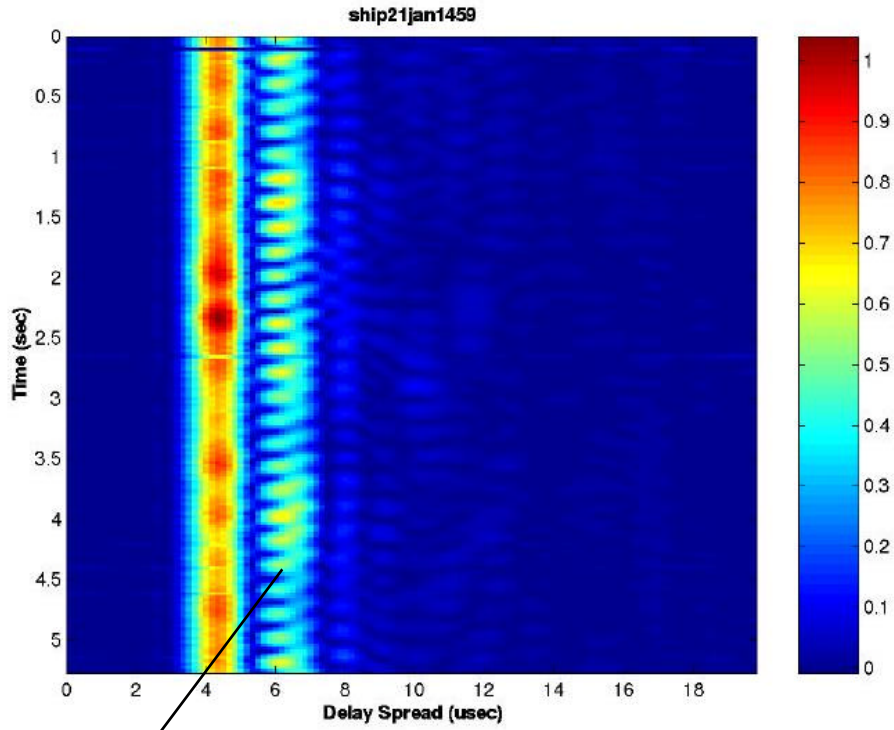

rel. velocity = (26 cycles/5.3 sec) / (1 cycle/2.52 sec)
= 12.37 KT

to view mpeg movies see http://pike.spawar.navy.mil/hdrlos

HDR LOS Channel Estimation

21 Jan 1739: ship in blue water off Point Loma

Spectrum Analyzer Data

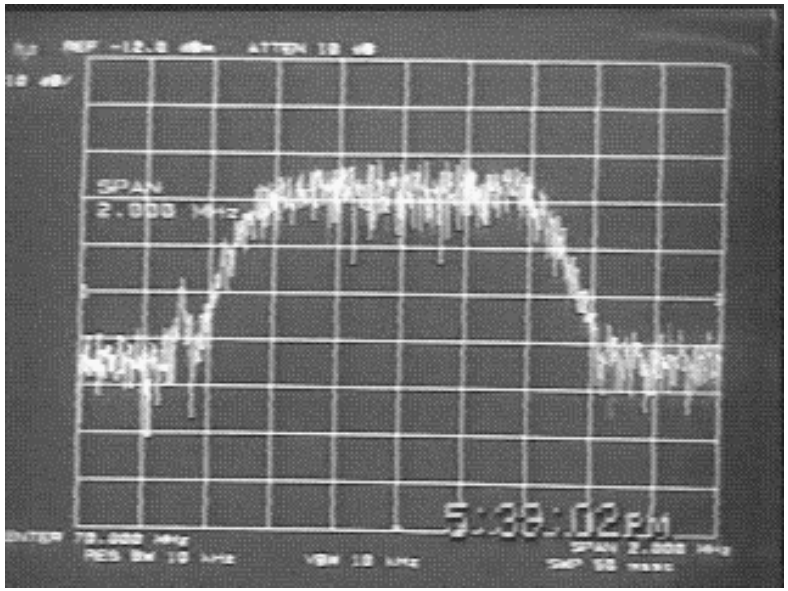

Span: 2 MHz, RBW: 10 kHz,
VBW: 10 KHz, SWP: 50 msec

Channel Estimate as a function of time

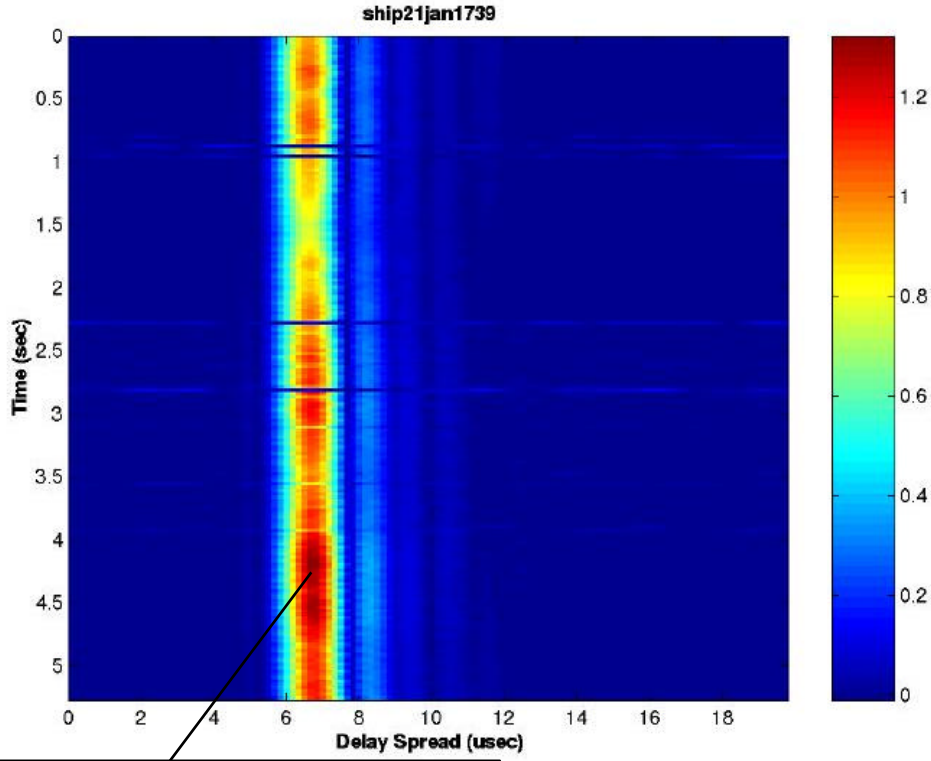

- very slow flat fading of 2-4 dB
- typical for much of blue water environments
- sidelobes due mostly to OA/9123 filtering

to view mpeg movies see http://pike.spawar.navy.mil/hdrlos